Many thanks to Anh Diep for scanning this file.

Before beginning any service procedure, refer to the 1993 RX-7 Body Electrical Troubleshooting Manual; see section S for air bag system precautions and J1 for audio anti-theft system precautions.

CLUTCH

37U0HX-001

INDEX

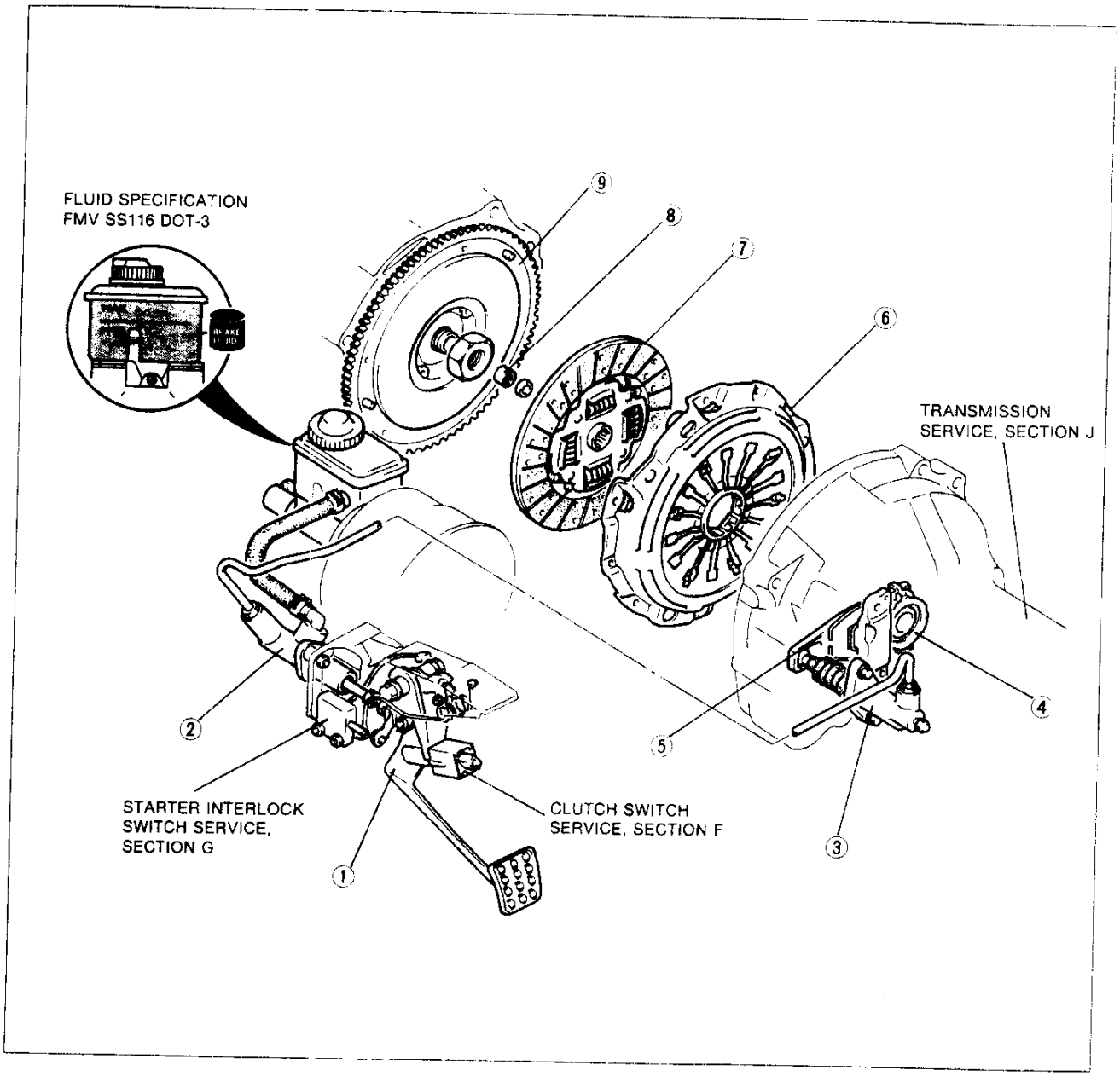

37U0HX-002

OUTLINE

SPECIFICATIONS

Item		Transmission model	R15M-D (R5M-D)
Clutch control			Hydraulic
Clutch pedal	Type		Suspended
	Pedal ratio		6.35
	Full stroke	mm {in}	135 {5.32}
	Height (with carpet)	mm {in}	165.5–177.0 {6.516–6.968}
Clutch disc	Outer diameter	mm {in}	236 {9.29}
	Inner diameter	mm {in}	160 {6.30}
	Facing thickness	Flywheel side mm {in}	3.5 {0.14}
		Pressure plate side mm {in}	3.5 {0.14}
Clutch cover	Type		Diaphragm spring
	Set load	N {kgf, lbf}	7,220 {736,1619}
Clutch master cylinder	Inner diameter	mm {in}	15.87 {0.625}
Clutch release cylinder	Inner diameter	mm {in}	19.05 {0.750}
Clutch fluid			FMVSS116 DOT-3

37U0HX-003

TROUBLESHOOTING GUIDE

Problem	Possible Cause	Action	Page
Slipping	Clutch disc facing worn excessively	Replace	**H–17**
	Clutch disc facing surface hardened or oil soaked	Repair or replace	**H–17**
	Pressure plate damaged	Replace	**H–17**
	Flywheel damaged	Replace	**H–17**
	Diaphragm spring damaged or weak	Replace	**H–17**
	Insufficient clutch pedal play	Adjust	**H–6**
	Clutch pedal sticking	Repair or replace	**H–7, 8**
Faulty disengagement	Clutch disc damaged or excessive runout	Replace	**H–17**
	Clutch disc splines rusted or worn	Repair or replace	**H–17**
	Oil on clutch disc facing	Repair or replace	**H–17**
	Diaphragm spring damaged or weak	Replace	**H–17**
	Excessive clutch pedal play	Adjust	**H–6**
	Leakage of clutch fluid	Locate and repair or replace	–
Clutch vibrates when accelerating	Oil on clutch disc facing	Repair or replace	**H–17**
	Clutch disc facing hardened or damaged	Repair or replace	**H–17**
	Diaphragm spring weak	Replace	**H–17**
	Clutch disc facing rivets loose	Replace	**H–17**
	Pressure plate damaged or excessive runout	Replace	**H–17**
	Flywheel surface hardened or damaged	Repair or replace	**H–17**
	Loose or worn engine mount	Tighten or replace	–
Clutch pedal sticks	Pedal shaft not properly lubricated	Lubricate or replace	**H–8**
Abnormal noise	Clutch release collar damaged	Replace	**H–17**
	Release collar not properly lubricated	Lubricate or replace	**H–17**
	Torsion spring weak	Replace	**H–17**
	Pilot bearing worn or damaged	Replace	**H–17**
	Worn pivot points of release fork	Repair or replace	**H–17**
	Release fork contact points not properly lubricated	Lubricate or replace	**H–17**
Clutch pedal vibrates when engine running	Improper installation of or damage to wedge collar and wire ring assembly	Replace	**H–17**

37U0HX-004

CLUTCH FLUID

PREPARATION
SST

49 0259 770B Wrench flare nut		: For air bleeding

37U0HX-005

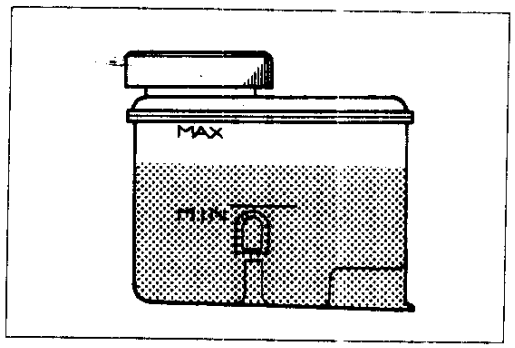

37U0HX-006

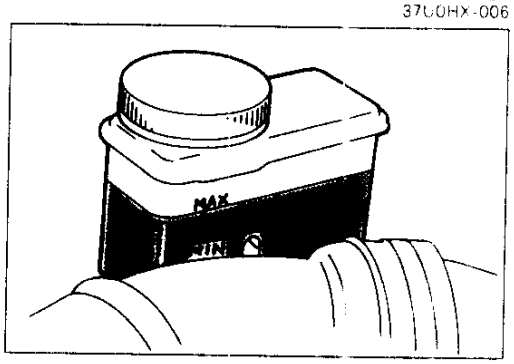

37U0HX-007

INSPECTION

Note

- **A common reservoir is used for the clutch and brake system fluids.**

1. Make sure that the fluid level in the reservoir is between the MAX and MIN mark.
2. If the fluid level is extremely low, check the clutch and brake systems for leakage.

REPLACEMENT

Caution

- **Be careful not to spill fluid on a painted surface. If this should happen, wash the surface off immediately.**
- **Use only the specified fluid. Avoid mixing different brands of fluid.**
- **Do not reuse old clutch fluid.**
- **The clutch and brakes draw fluid from the same reservoir; therefore draining the clutch fluid also drains the brake fluid from the reservoir.**

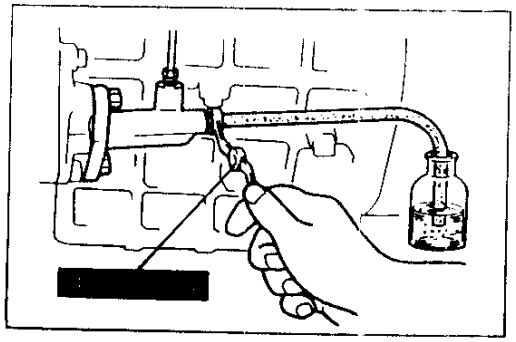

37U0HX-009

1. Drain the brake fluid from the reservoir by using a suction pump. (Refer to section P.)
2. Remove the bleeder cap from the clutch release cylinder and attach a vinyl hose to the bleeder plug.
3. Insert the other end of the vinyl hose into a clear container.
4. Loosen the bleeder screw by using the **SST**.
5. With another person slowly pumping the clutch pedal, drain the clutch fluid.
6. Repeat step 5 until all the fluid is drained.

7. Tighten the bleeder screw by using the **SST**.

Caution

- **When tightening the bleeder screw with the SST, adjust the below-written tightening torque by using the following formulas. Choose the formula that applies to you.**

(L = torque wrench length)

N·m	N·m × L m ÷ (L m + 0.05)
kgf·cm	kgf·cm × L cm ÷ (L cm + 5.0)
in·lbf	in·lbf × L in ÷ (L in + 2.0)

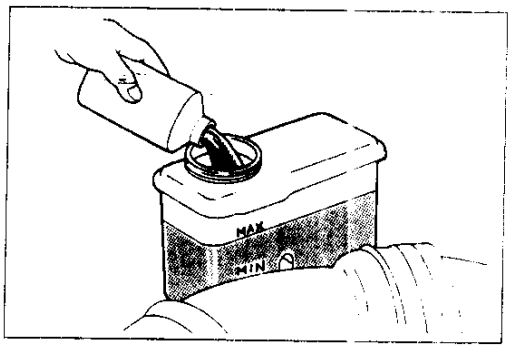

37J0HX 010

Tightening torque:
5.9–8.8 N·m {60–90 kgf·cm, 53–78 in·lbf}

8. Add fluid to the MAX mark.
9. Bleed the air from the clutch. (Refer to page H–11.)
10. Bleed the air from the brakes. (Refer to section P.)
11. Check for correct clutch operation.
12. Verify that there is no fluid leakage.

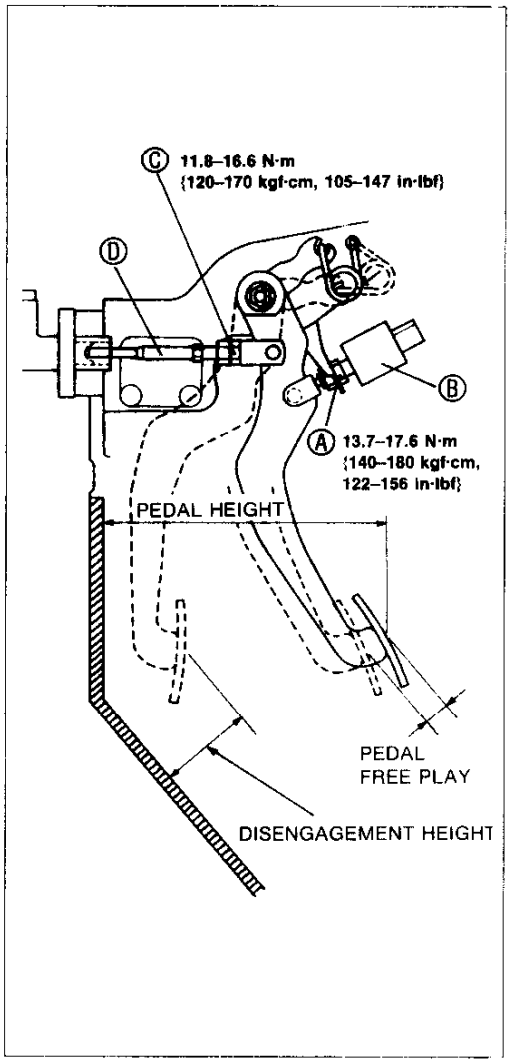

37J0HX-01

CLUTCH PEDAL

ADJUSTMENT

Clutch Pedal Height

Inspection

Measure the distance from the upper surface of the pedal to the carpet.

Pedal height: 165.5–177.0 mm {6.516–6.968 in} (with carpet)

If necessary, adjust the pedal height.

Adjustment

1. Disconnect the clutch switch connector.
2. Loosen locknut A and turn clutch switch B until the pedal height is correct.
3. Tighten locknut A.

Tightening torque:
13.8–17.6 N·m {140–180 kgf·cm 122–156 in·lbf}

4. After adjustment, inspect the pedal free play.

Clutch Pedal Free Play

Inspection

Depress the clutch pedal by hand until clutch resistance is felt.

Pedal free play: 0.6–3.2 mm {0.02–0.13 in}
Total pedal free play: 5.1–14 mm {0.20–0.55 in}

If necessary, adjust the pedal free play.

Adjustment

1. Loosen locknut C and turn push rod D until pedal free play is correct.
2. Verify that the disengagement height from the upper surface of the pedal height to the carpet is correct when the pedal is fully depressed.

Minimum disengagement height: 48 mm {1.9 in} (with carpet)

3. Tighten locknut C.

Tightening torque:
11.8–16.6 N·m {120–170 kgf·cm, 105–147 in·lbf}

4. After adjustment, inspect the pedal height.

REMOVAL / INSTALLATION

1. Remove in the order shown in the figure.
2. Install in the reverse order of removal.

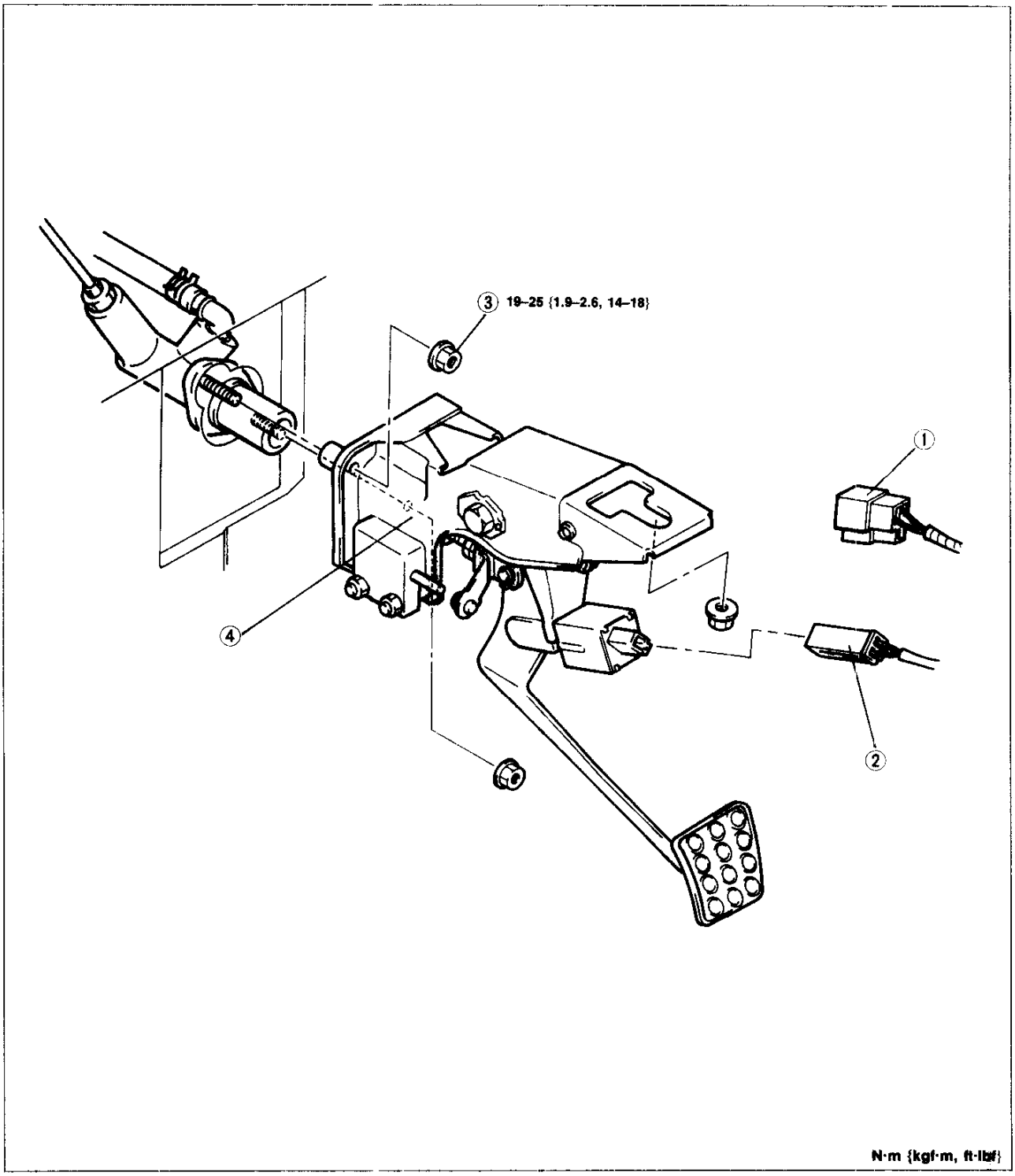

37U0HX-012

1. Starter interlock switch connector
2. Clutch switch connector
3. Nut
4. Clutch pedal assembly
   Adjustment ..... page H–6
   Overhaul ..... page H–8

OVERHAUL

1. Disassemble in the order shown in the figure.
2. Inspect all parts and repair or replace as necessary.

Note

- **Apply lithium-based grease to the spring, bushings, and pins when assembling.**

3. Assemble in the reverse order of disassembly, referring to **Assembly Note**.

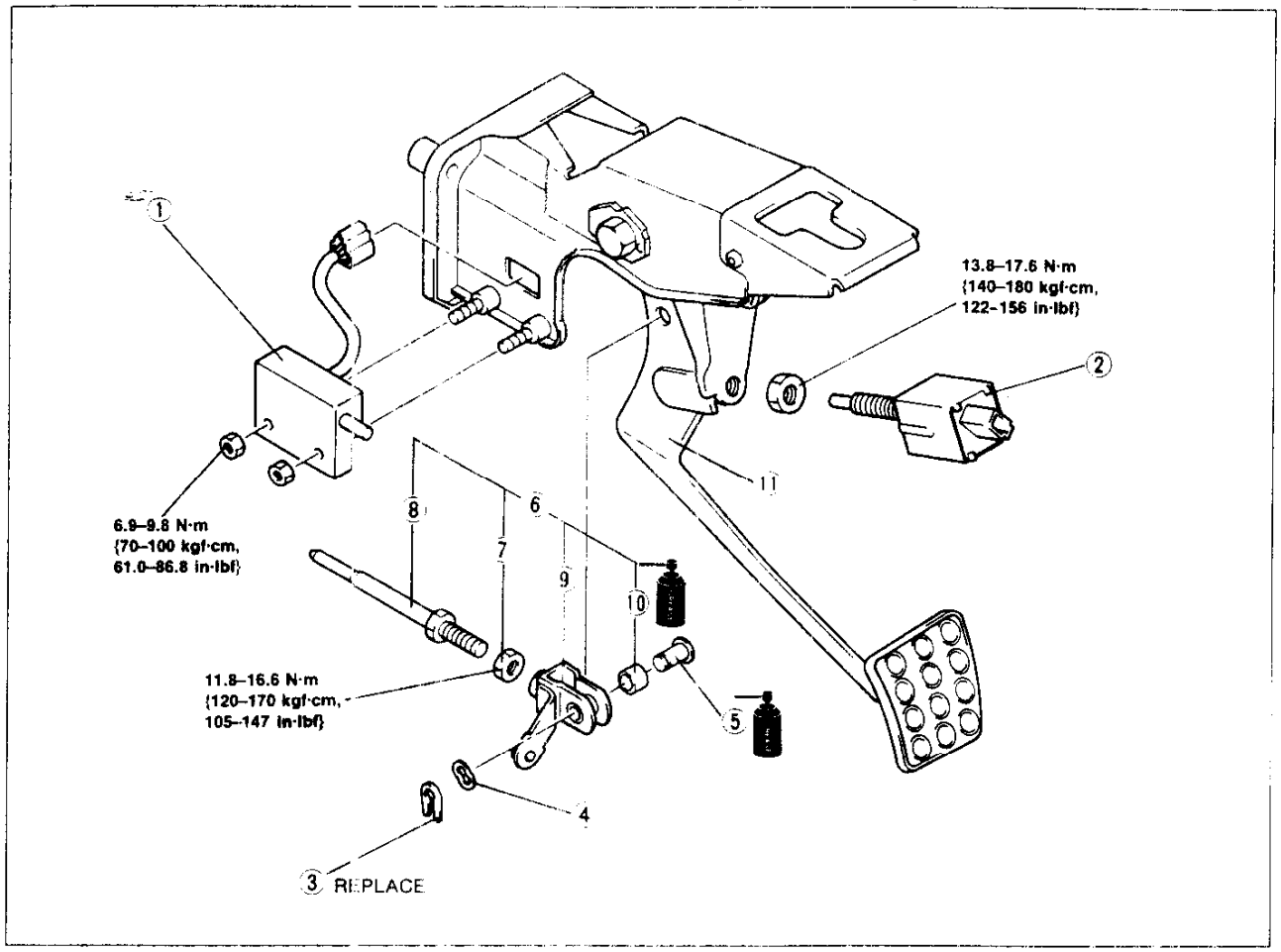

37U0HX013

1. Starter interlock switch
2. Clutch switch
3. Retaining ring
4. Wave washer
5. Pin
6. Push rod assembly
   Inspect for damage and bending.
7. Nut
8. Push rod
9. Fork
10. Spacer
11. Clutch pedal assembly

CLUTCH MASTER CYLINDER

PREPARATION

SST

49 0259 770B Wrench, flare nut		For disconnecting and connecting clutch pipe

37U0HX-014

REMOVAL / INSPECTION / INSTALLATION

Caution

- **Clutch fluid will damage painted surfaces. Be sure to use a container or rags to collect it. If fluid gets on a painted surface, wipe it off immediately with a rag.**

1. Remove in the order shown in the figure, referring to **Removal Note**.
2. Inspect all parts and repair or replace as necessary
3. Install in the reverse order of removal, referring to **Installation Note**.

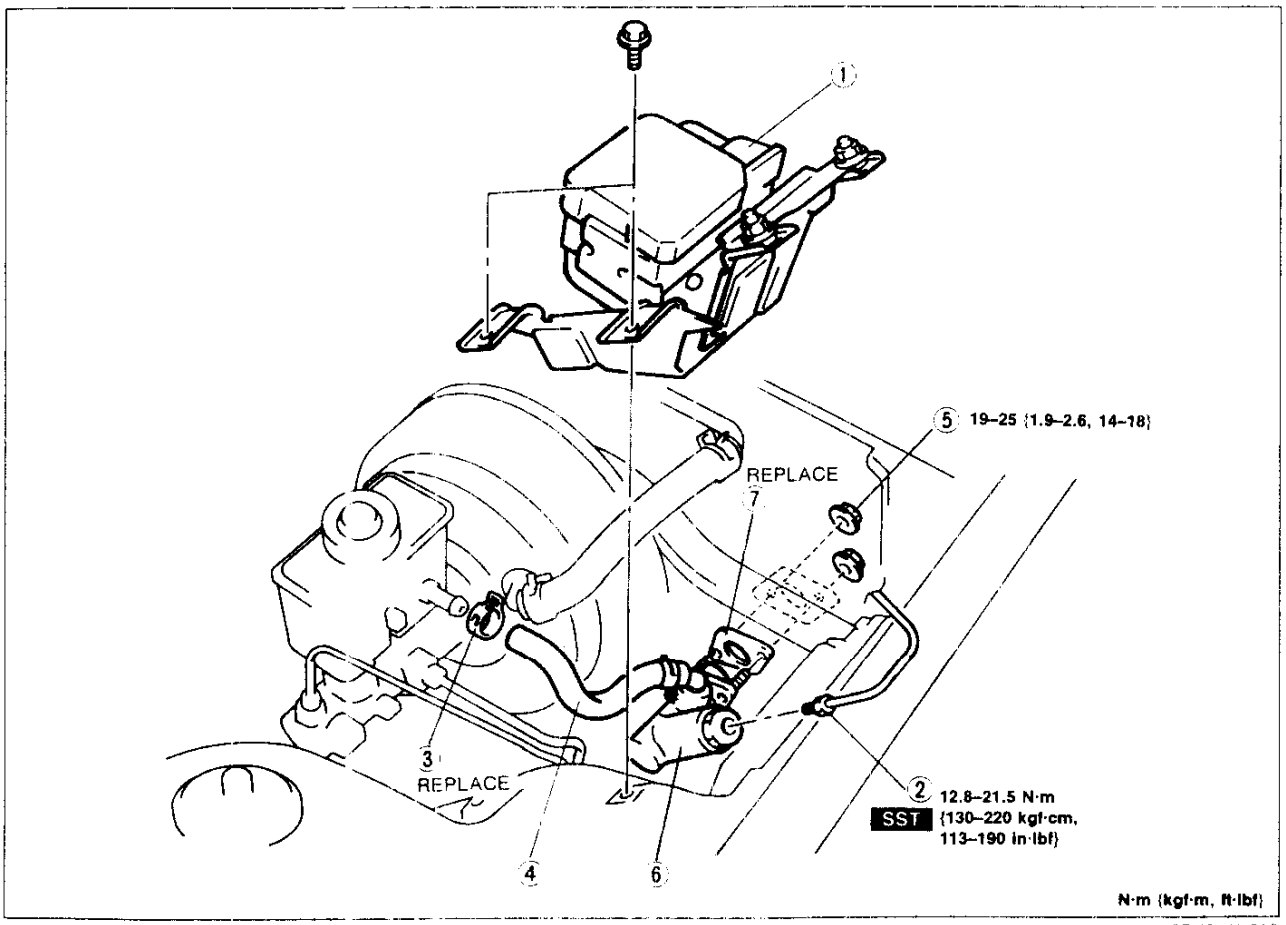

37U0HX-015

1. Cruise control actuator assembly
2. Clutch pipe
   Removal Note ..... page H–10
   Installation Note ..... page H–10
3. Hose clamp
4. Clutch hose
   Installation Note ..... page H–10
5. Nut
6. Clutch master cylinder
   Overhaul ..... page H–12
   Inspect for fluid leakage from the cylinder bore
   Air bleeding .... page H–11
7. Gasket

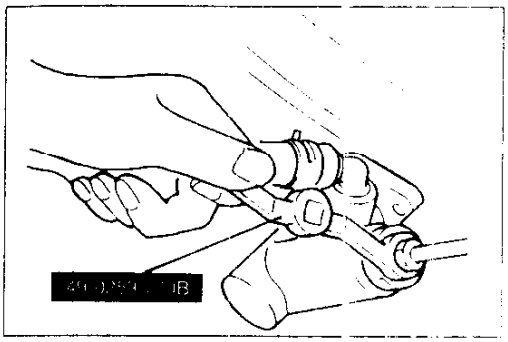

37U-HX-016

Removal Note
Clutch pipe

Caution

- **Clutch fluid will damage painted surfaces. If fluid does get on a painted surface, wipe it off immediately with a rag.**

1. Disconnect the clutch pipe by using the **SST**

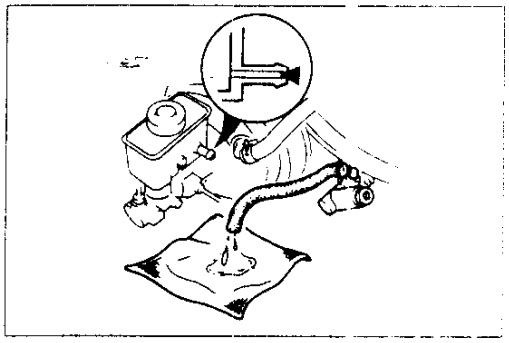

37J0HX-017

2. Disconnect the clutch hose from the reservoir.
3. Plug the outlet of the reservoir.

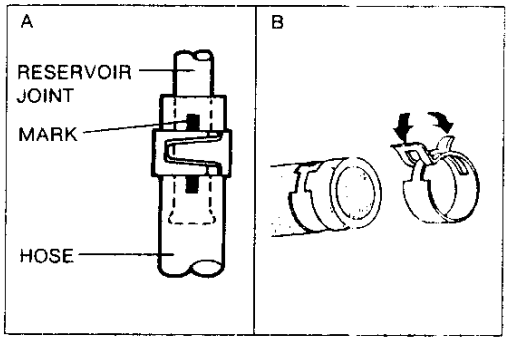

37U0HX-018

Installation Note
Clutch hose

Caution

- **Install the clutch hose with the mark facing upward, as shown in figure A.**
- **If reusing the clutch hose, install the new hose clamp exactly into the mark left by the previous hose clamp, as shown in figure B.**
- **Squeeze the clamp lightly with large pliers to ensure a good fit.**

Clutch pipe

Tighten the clutch pipe by using the **SST**.

Caution

- **Before tightening the clutch pipe with the SST, refer to the formulas on page H–5 to calculate the required torque.**

Tightening torque:
12.8–21.5 N·m {130–220 kgf·cm, 113–190 in·lbf}

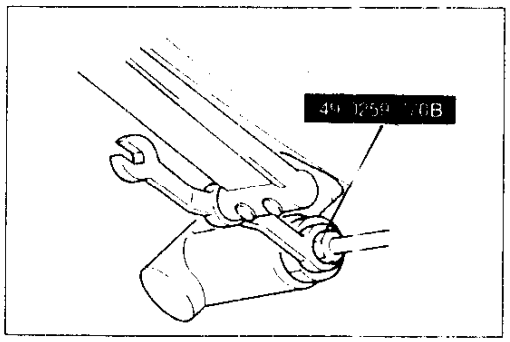

37U0HX-019

After-installation Procedure

1. Bleed the clutch system. (Refer to page H–11.)
2. Add fluid to the reservoir MAX mark.
3. Inspect and adjust the clutch pedal height and free play. (Refer to page H–6.)

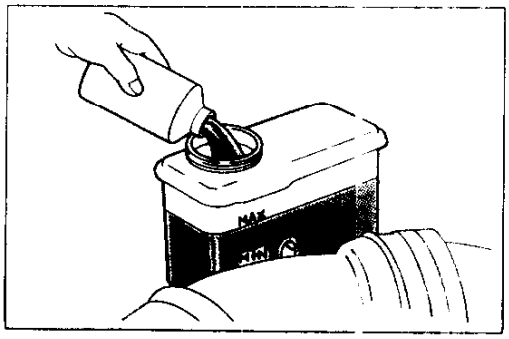

37U0HX-020

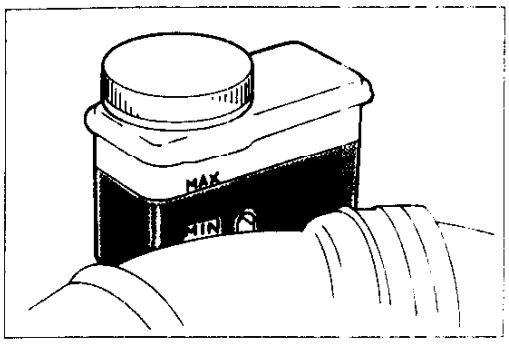

AIR BLEEDING

The clutch hydraulic system must be bled to remove air introduced whenever a hydraulic line is disconnected.

Note

- **The fluid in the reservoir must be maintained at the 3/4 level or higher during air bleeding.**

Caution

- **Be careful not to spill fluid on a painted surface. If this should happen, wash the surface off immediately.**
- **Use only the specified fluid. Avoid mixing different brands of fluid.**
- **Do not reuse clutch fluid.**

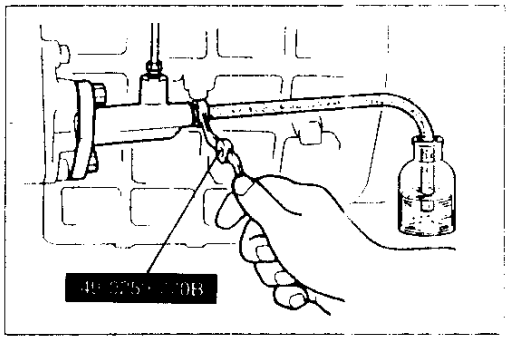

1 Remove the bleeder cap from the clutch release cylinder and attach a vinyl hose to the bleeder plug.
2 Insert the other end of the vinyl hose in a fluid-filled clear container.
3 With another person slowly pumping the clutch pedal, use the **SST** to loosen the bleeder screw to let fluid and air escape. Close the bleeder screw.
4 Repeat step 3 until no air bubbles are seen in the fluid.

Caution

- **Before tightening the bleeder screw with the SST, refer to the formulas on page H–5 to calculate the required torque.**

5 Tighten the bleeder screw by using the **SST**.

Tightening torque:
5.9–8.8 N·m {60–90 kgf·cm, 53–78 in·lbf}

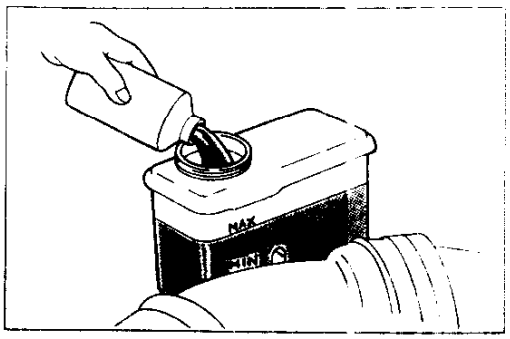

37U0HX-023

6 Add fluid to the MAX mark.
7 Check for correct clutch operation.
8 Verify that there is no fluid leakage.
9 Verify that the brakes function properly. (Refer to section P.)

OVERHAUL

Caution

- **Clean the disassembled parts in solvent and blow through all ports and passages with compressed air. Before assembling, coat the piston secondary cup and the cylinder bore with clean fluid, and make sure there are no dust or particles in or on any of the parts.**

1. Disassemble in the order shown in the figure, referring to **Disassembly Note**.
2. Inspect all parts and repair or replace as necessary.
3. Assemble in the reverse order of disassembly, referring to **Assembly Note**.

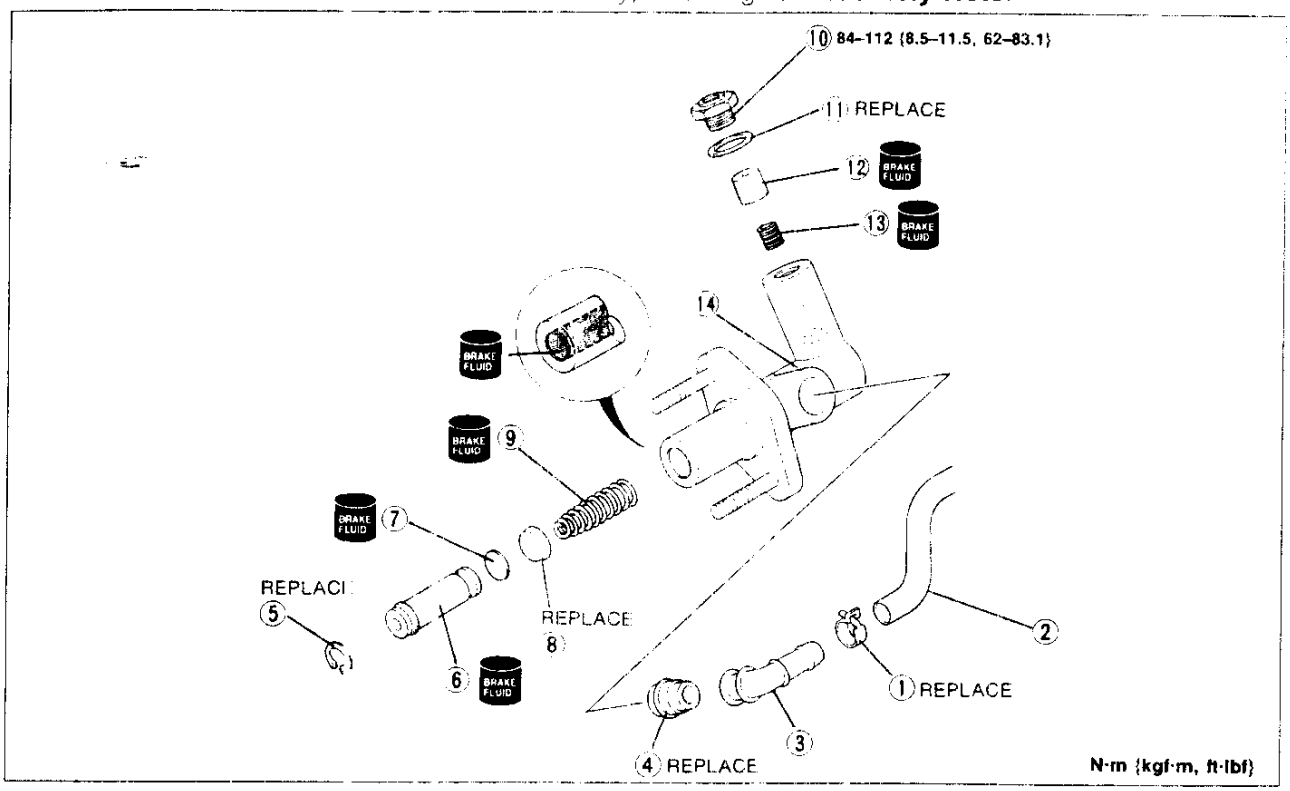

37U0HX-024

1. Hose clamp
2. Clutch hose
3. Joint
4. Bushing
5. Snap ring
   Disassembly Note ..... below
   Assembly Note ..... page H–13
6. Piston and secondary cup assembly
   Disassembly Note ..... page H–13
   Inspect for wear, scoring, and cracks
   Assembly Note ..... page H–13
7. Spacer
8. Primary cup
   Inspect for wear and cracks
9. Return spring
10. Joint bolt
11. Packing
12. One-way valve piston
    Disassembly Note ..... page H–13
13. Return spring
14. Master cylinder body
    Inspect for scoring and corrosion.
    Replace master cylinder assembly if any scoring or corrosion is found.

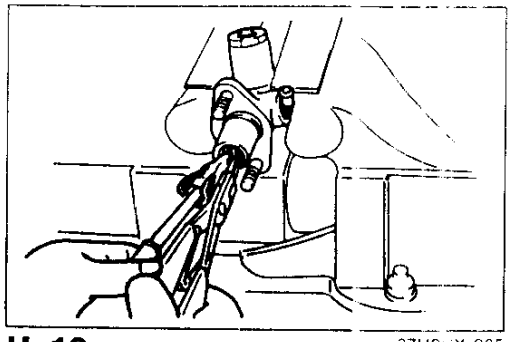

37U0HX-025

Disassembly Note

Snap ring

Caution

- **Do not damage the push rod contact surface of the piston.**

Press down on the piston by using a cloth-wrapped Phillips screwdriver, and remove the snap ring.

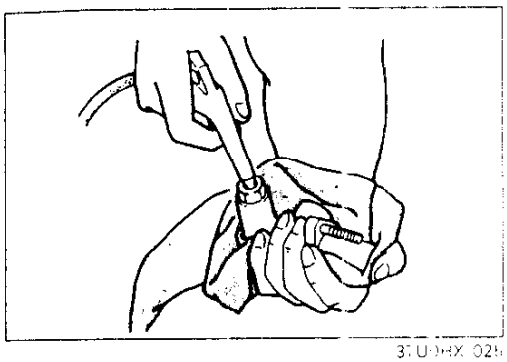

37U0HX-025

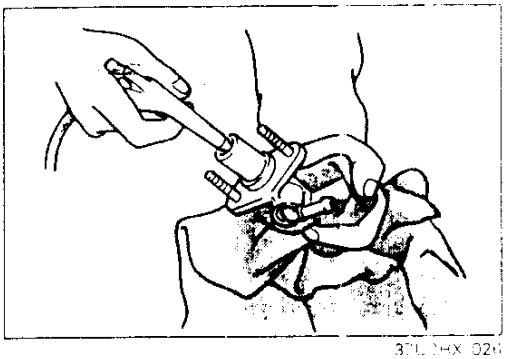

37U0HX-026

Piston and secondary cup assembly

Caution

- **Hold a rag over the master cylinder to prevent the piston and secondary cup assembly from jumping out.**

Remove the piston and secondary cup assembly, spacer, primary cup, and the return spring by applying compressed air through the clutch pipe installation hole

One-way valve piston

Caution

- **Hold a rag over the master cylinder to prevent the piston and spring from jumping out.**

Remove the piston by applying compressed air through the cylinder bore.

Assembly Note

Caution

- **Before assembly, make sure all parts are completely clean.**
- **Use only the specified clutch fluid. Avoid mixing different brands of clutch fluid.**
- **Do not reuse clutch fluid.**
- **Apply the specified clutch fluid to the piston and secondary cup assembly, spacer, primary cup, and cylinder bore before assembly.**
- **Replace parts with new ones whenever specified.**

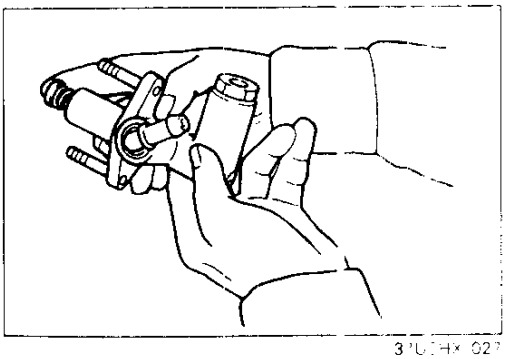

37U0HX-027

Piston and secondary cup assembly

Install the spring, primary cup, spacer, and piston and secondary cup assembly, noting the proper direction of the parts

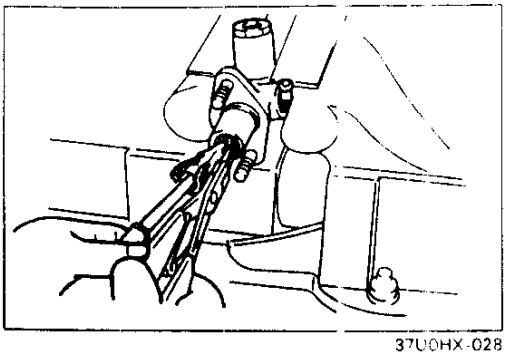

37U0HX-028

Snap ring

Caution

- **Do not damage the pushrod contact surface of the piston.**

Press down on the piston with a cloth-wrapped Phillips screwdriver, and install the snap ring.

CLUTCH RELEASE CYLINDER

PREPARATION
SST

49 0259 770B Wrench, flare nut		For disconnecting and connecting clutch pipe

37U0HX-029

REMOVAL / INSPECTION / INSTALLATION

Caution

- **Clutch fluid will damage painted surfaces. If fluid does get on a painted surface, wipe it off immediately with a rag.**

1. Remove in the order shown in the figure, referring to **Removal Note**.
2. Inspect all parts and repair or replace as necessary.
3. Install in the reverse order of removal, referring to **Installation Note**.

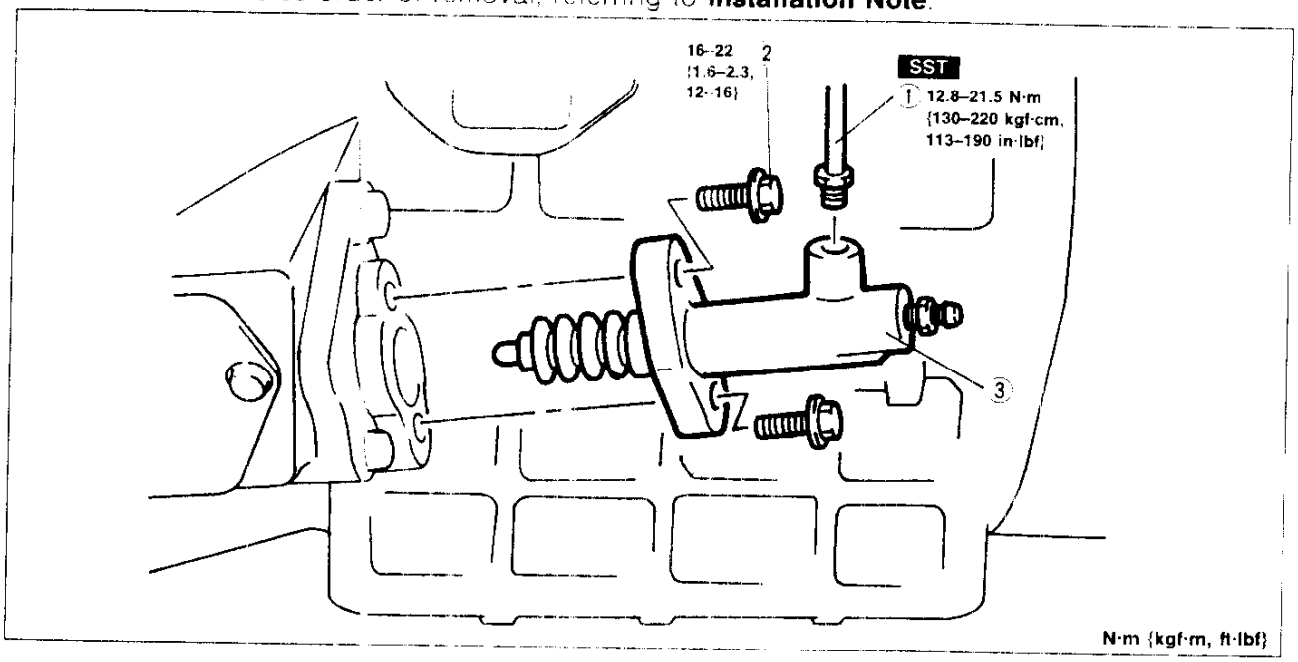

37U0HX-030

1. Clutch pipe
   Removal Note ..... below
   Installation Note ..... page H–15
2. Bolt
3. Clutch release cylinder
   Remove boot and check for fluid leakage
   Overhaul ..... page H–15

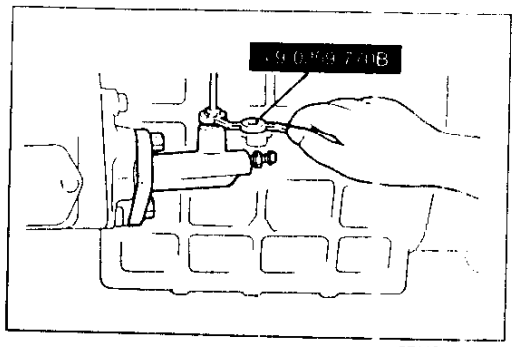

37U0HX-031

Removal Note
Clutch pipe

Caution

- **Plug the clutch pipe after removing, to avoid fluid leakage.**

Disconnect the clutch pipe from the clutch release cylinder by using the **SST**.

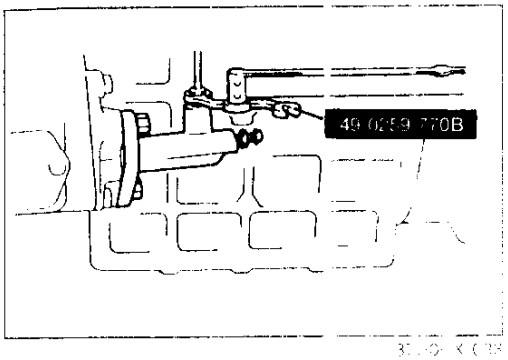

Installation Note
Clutch pipe

Caution
- **Before tightening the clutch pipe with the SST, refer to the formulas on page H–5 to calculate the required torque.**

Tighten the clutch pipe onto the clutch release cylinder.

Tightening torque:
12.8–21.5 N·m {130–220 kgf·cm, 113–190 in·lbf}

Air Bleeding

After installation, bleed the clutch system.
(Refer to page H–11.)

OVERHAUL

Caution
- **Clean the disassembled parts in solvent and blow through all ports and passages with compressed air.**
- **Before assembly, make sure all parts are completely clean.**
- **Apply the specified clutch fluid to the piston and cup assembly and cylinder bore before assembly.**

1. Disassemble in the order shown in the figure, referring to **Disassembly Note**.
2. Inspect all parts and repair or replace as necessary.
3. Assemble in the reverse order of disassembly.

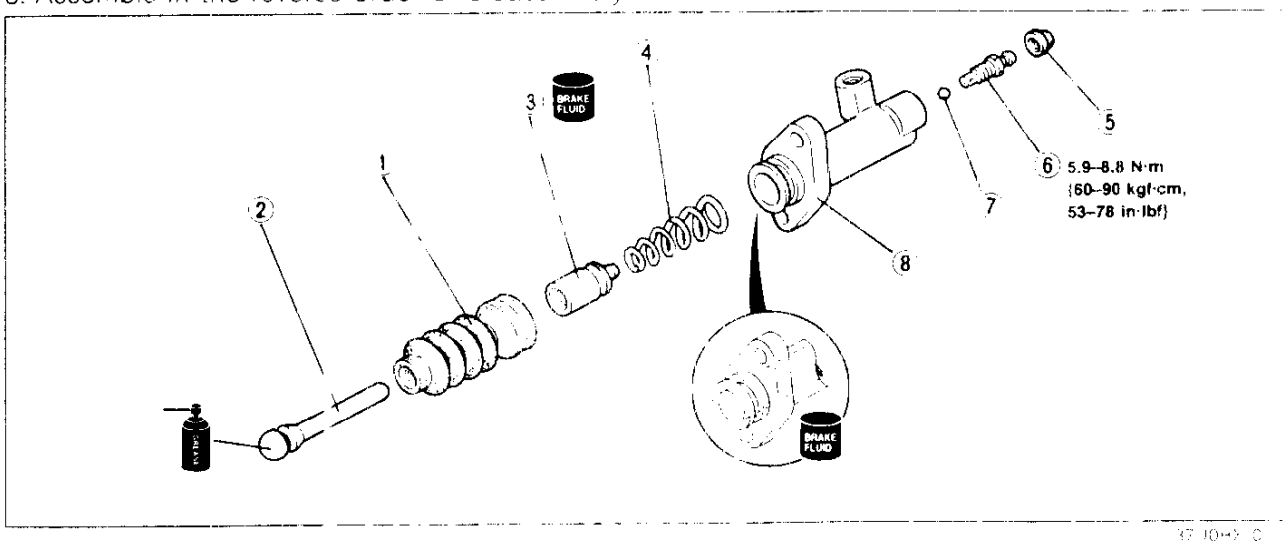

1. Boot
2. Push rod
3. Piston and cup assembly
   Disassembly Note ..... page H–16
   Inspect for wear, scoring and cracks
4. Return spring
5. Bleeder cap
6. Bleeder screw
7. Steel ball
8. Release cylinder body
   Inspect cylinder bore for scoring and corrosion
   Replace cylinder assembly if any is found

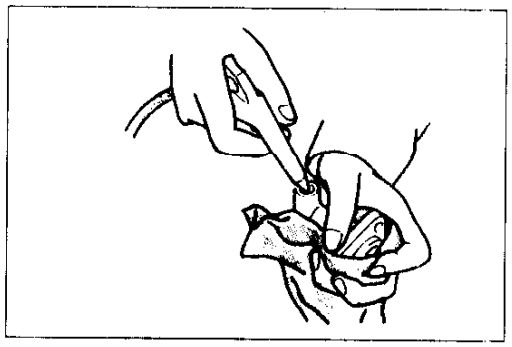

37U0HX-035

Disassembly Note
Piston and cup assembly

Caution
- **Hold a rag over the release cylinder to prevent the piston and cup assembly from jumping out.**

Remove the piston and cup assembly by applying compressed air through the clutch pipe installation hole.

CLUTCH UNIT

PREPARATION
SST

49 F011 101 Brake, ring gear 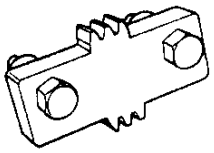	For prevention of engine rotation	49 0820 035 Box wrench, flywheel 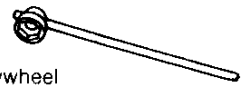	For removal and installation of flywheel
49 0839 305A Puller, counterweight 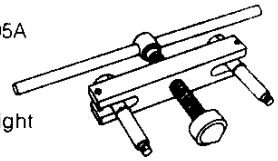	For removal of flywheel	49 SE01 310A Clutch disc centering tool 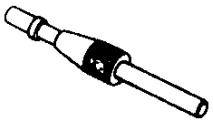	For support of clutch disc
49 1285 071 Puller, bearing 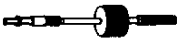	For removal of pilot bearing and oil seal	49 1285 073 Chuck (Part of 49 1285 071) 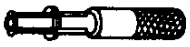	For removal of pilot bearing and oil seal
49 F011 1A1 Installer set, bearing 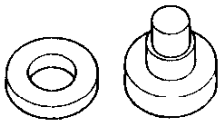	For installation of pilot bearing and oil seal	49 G030 795 Installer, oil seal 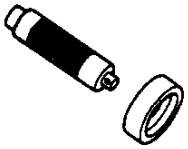	For installation of pilot bearing and oil seal
49 G030 797 Handle (Part of 49 G030 795) 	For installation of pilot bearing and oil seal		

37U0HX-036

REMOVAL / INSTALLATION

Note

- **Remove the clutch release cylinder with the clutch pipe connected.**
- **Do not remove the pilot bearing unless necessary.**

1. Remove in the order shown in the figure, referring to **Removal Note**.
2. Install in the reverse order of removal, referring to **Installation Note**.

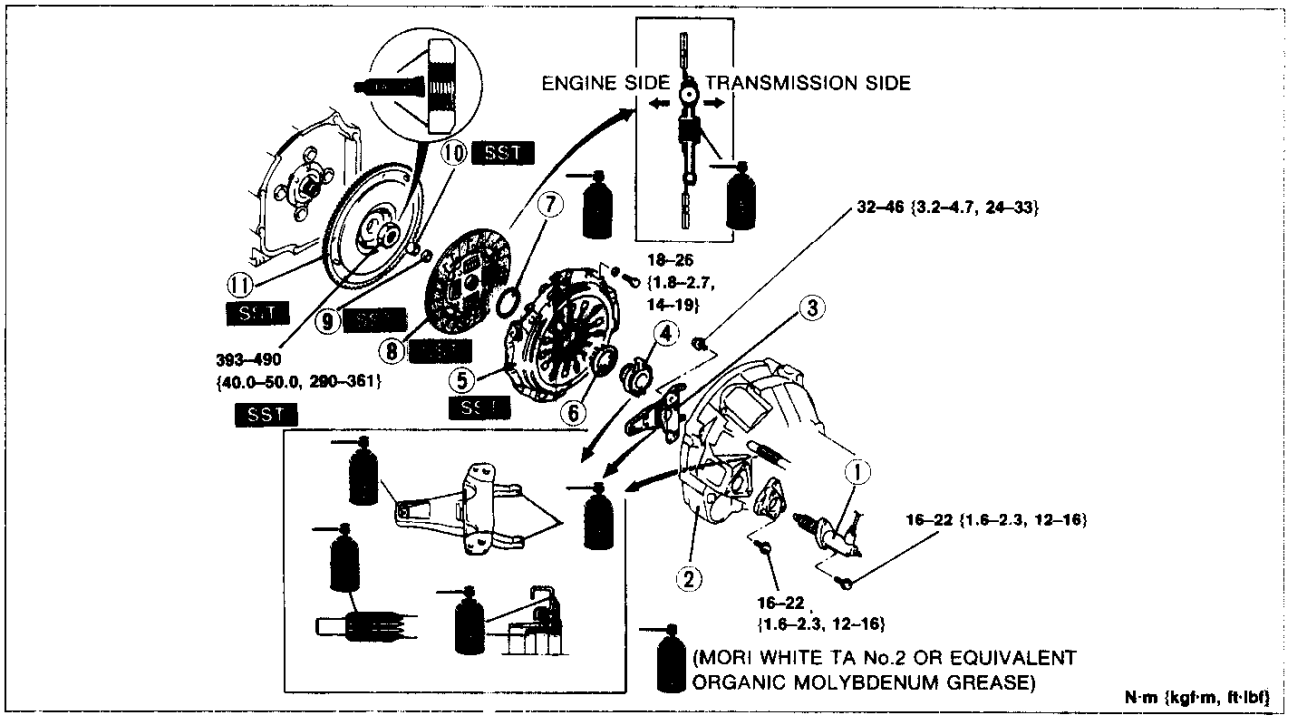

37U0HX 03

1. Clutch release cylinder
2. Transmission
   Service ..... section J
3. Clutch release fork assembly
   Removal Note ..... below
   Inspection ..... page H–21
   Overhaul ..... page H–22
4. Clutch release collar
   Removal Note ..... below
   Inspection ..... page H–23
5. Clutch cover
   Removal Note
   ..... page H–18
   Inspection ..... page H–20
   Installation Note
   ..... page H–20
6. Wedge collar
   Removal Note
   ..... page H–18
   Installation Note
   ..... page H–19
7. Wire ring
8. Clutch disc
   Removal Note
   ..... page H–18
   Inspection ..... page H–21
   Installation Note
   ..... page H–20
9. Oil seal
   Removal Note
   ..... page H–18
   Installation Note
   ..... page H–19
10. Pilot bearing
    Removal Note
    ..... page H–18
    Inspection ..... page H–23
    Installation Note
    ..... page H–19
11. Flywheel
    Removal Note
    ..... page H–18
    Inspection ..... page H–23
    Installation Note
    ..... page H–19

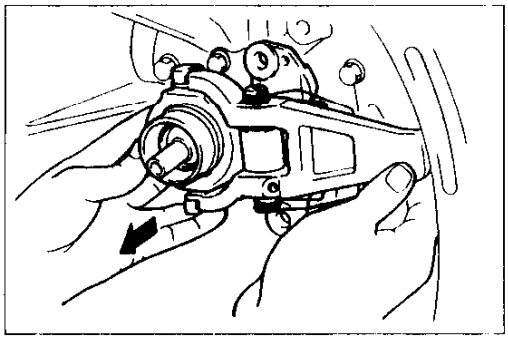

37U0HX 0 8

Removal Note

Clutch release fork assembly and clutch release collar

1. Remove the release fork assembly bolts.
2. Remove the release fork assembly and release collar together as shown in the figure.

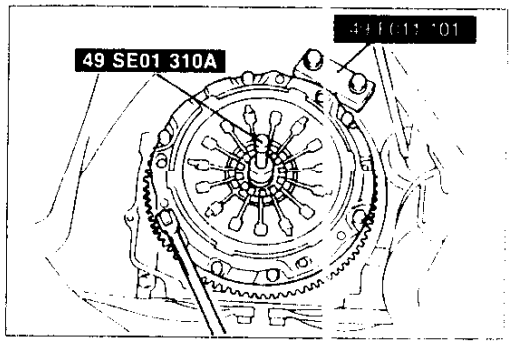

Clutch cover and disc

1. Install the **SST**.
2. Loosen each bolt one turn each in a crisscross pattern until spring tension is released.
3. Remove the clutch cover and disc.

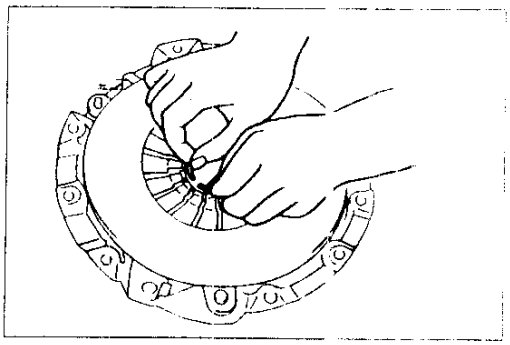

Wedge collar

Caution

- **Do not reuse the wire ring or the wedge collar.**

1. Remove the wire ring from the wedge collar.
2. Remove the wedge collar from the clutch cover.

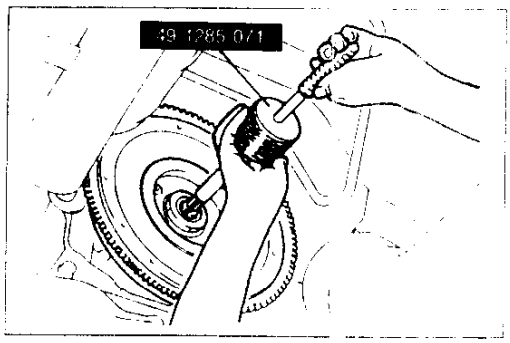

Oil seal and pilot bearing

Remove the pilot bearing together with the oil seal by using the **SST**.

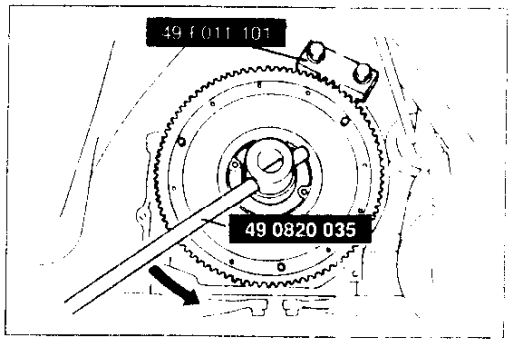

Flywheel

1. Hold the flywheel by using the **SST**.
2. Remove the locknut by using the **SST**.

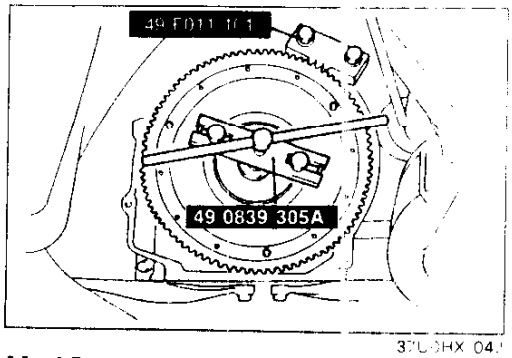

Note

- **After removing the flywheel, inspect for oil leakage past the crankshaft rear oil seal.**
- **If necessary, replace the oil seal. (Refer to section C.)**

3. Remove the flywheel by using the **SST**.
4. Remove the key from the eccentric shaft.

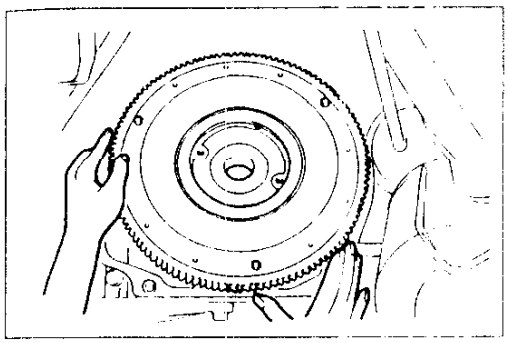

Installation Note
Flywheel

1. Set the key in the eccentric shaft.
2. Align the groove with the eccentric shaft key and slide the flywheel into place.

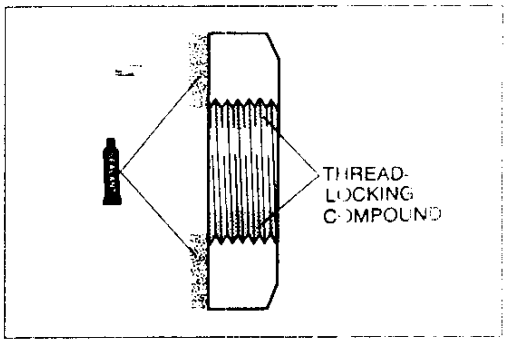

3. Apply a small amount of sealant and thread-locking compound to the flywheel locknut as shown.

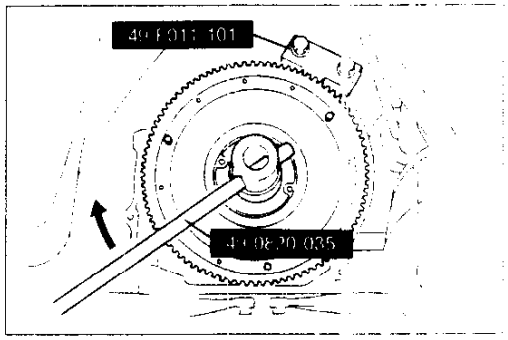

4. Install the **SST** to the flywheel.
5. Tighten the locknut by using the **SST**.

Tightening torque:
393–490 N·m {40.0–50.0 kgf·m, 290–361 ft·lbf}

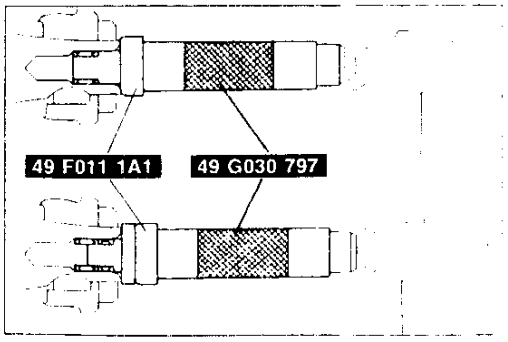

Pilot bearing and oil seal

1. Install the new bearing by using the **SST.**

Bearing outer diameter: 20 mm {0.79 in}
Insertion depth: 11.5–12.3 mm {0.453–0.482 in}

2. Install the new oil seal by using the **SST**.

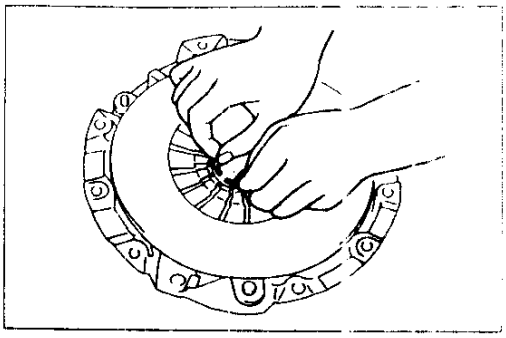

Wedge collar

Caution
- **Do not deform the wedge collar or wire ring when installing.**

1. Install a new wedge collar to the clutch cover.
2. Apply a small amount of grease to a new wire ring and install into exact position.

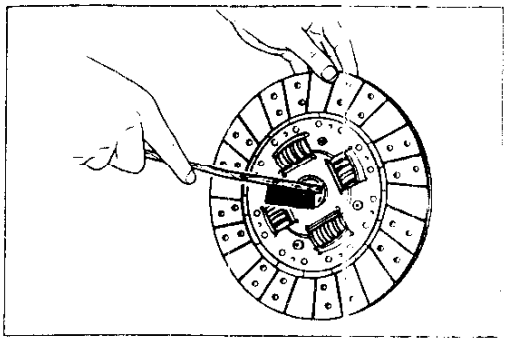

37U[illegible]X-049

Clutch disc

1. Clean the clutch disc splines and main drive gear splines. Apply molybdenum sulfide grease to the splines.

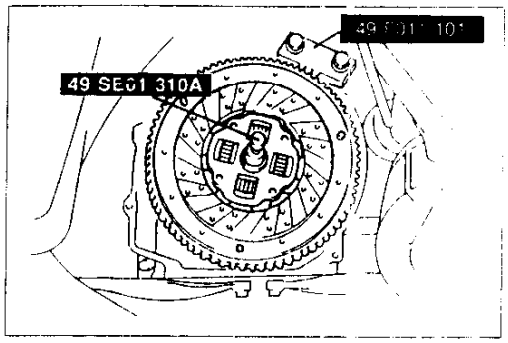

37U[illegible]X-050

2. Hold the flywheel by using the **SST**.
3. Hold the clutch disc in position by using the **SST**.

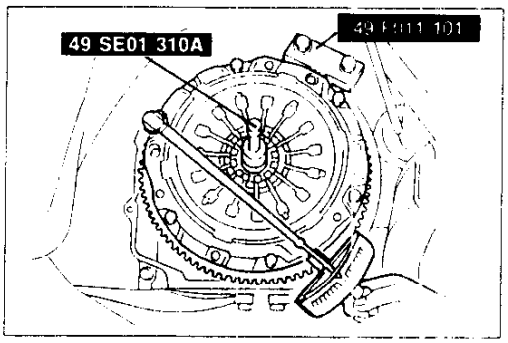

37U[illegible]X-051

Clutch cover

Caution

- **Do not damage the wedge collar when installing the clutch cover.**

1. Align the dowel holes with the flywheel dowels and set the clutch cover in place.
2. Tighten the bolts evenly and gradually in a crisscross pattern, while securing the flywheel by using the **SST**.

Tightening torque:
18–26 N·m {1.8–2.7 kgf·m, 14–19 ft·lbf}

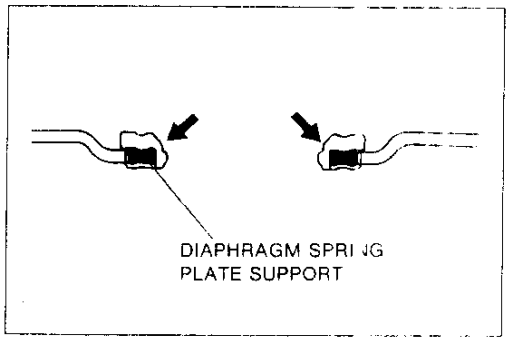

37U[illegible]X-052

CLUTCH COVER

INSPECTION

Caution

- **Inspect for wear and damage, and replace if necessary.**

1. Inspect for wear or damage to the wire ring contact surface of the diaphragm spring plate.
2. Inspect for loosening of the diaphragm spring plate support.

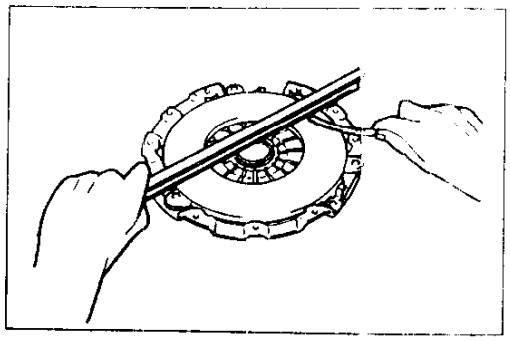

37U0HX-053

3. Measure the flatness of the pressure plate/clutch disc contact surface in a crisscross pattern with a straightedge and a feeler gauge.

Maximum: 0.20 mm {0.008 in}

4. Check for discoloration of the pressure plate/clutch disc contact surface.

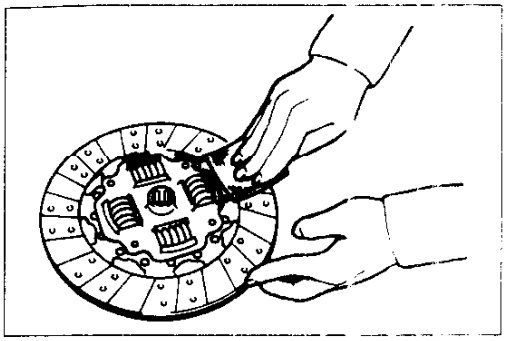

37U0-HX-053

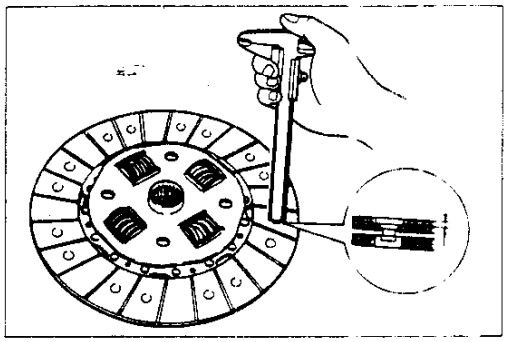

37U0-HX-054

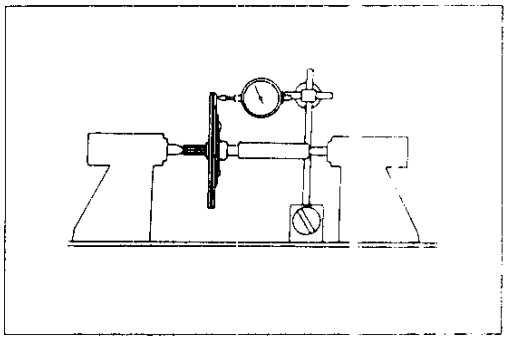

37U0-HX-055

CLUTCH DISC

INSPECTION

Caution

- **Inspect for wear and damage, and replace if necessary.**

1. Inspect the lining surface for burning or oil contamination. Remove minor scratches or discoloration with sandpaper.
2. Inspect for loose facing rivets and torsion springs. Replace the clutch disc if any are loose.
3. Measure the thickness of the lining at a rivet head on both sides with vernier calipers.

   Thickness: 0.3 mm {0.012 in} min.

4. Measure the clutch disc runout with a dial indicator. Replace the clutch disc if runout is excessive.

   Runout: 0.6 mm {0.024 in} max.

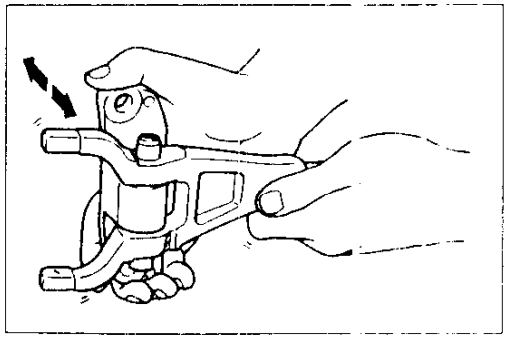

37U0-HX-056

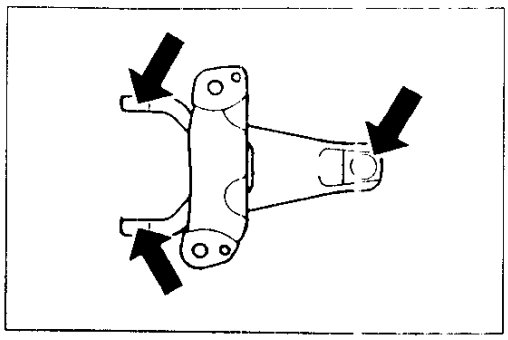

37U0-HX-057

CLUTCH RELEASE FORK ASSEMBLY

Caution

- **Remove the return spring before inspection.**

INSPECTION

1. Swing the release fork back and forth, and make sure it moves smoothly.
2. Inspect for wear and damage to the push rod contact surface.
3. Inspect for wear and damage to the release collar contact surfaces.
4. Replace parts as necessary.

CLUTCH RELEASE FORK ASSEMBLY

OVERHAUL

1. Disassemble in the order shown.
2. Inspect all parts and replace as necessary.
3. Assemble in the reverse order of disassembly, referring to **Assembly Note**.

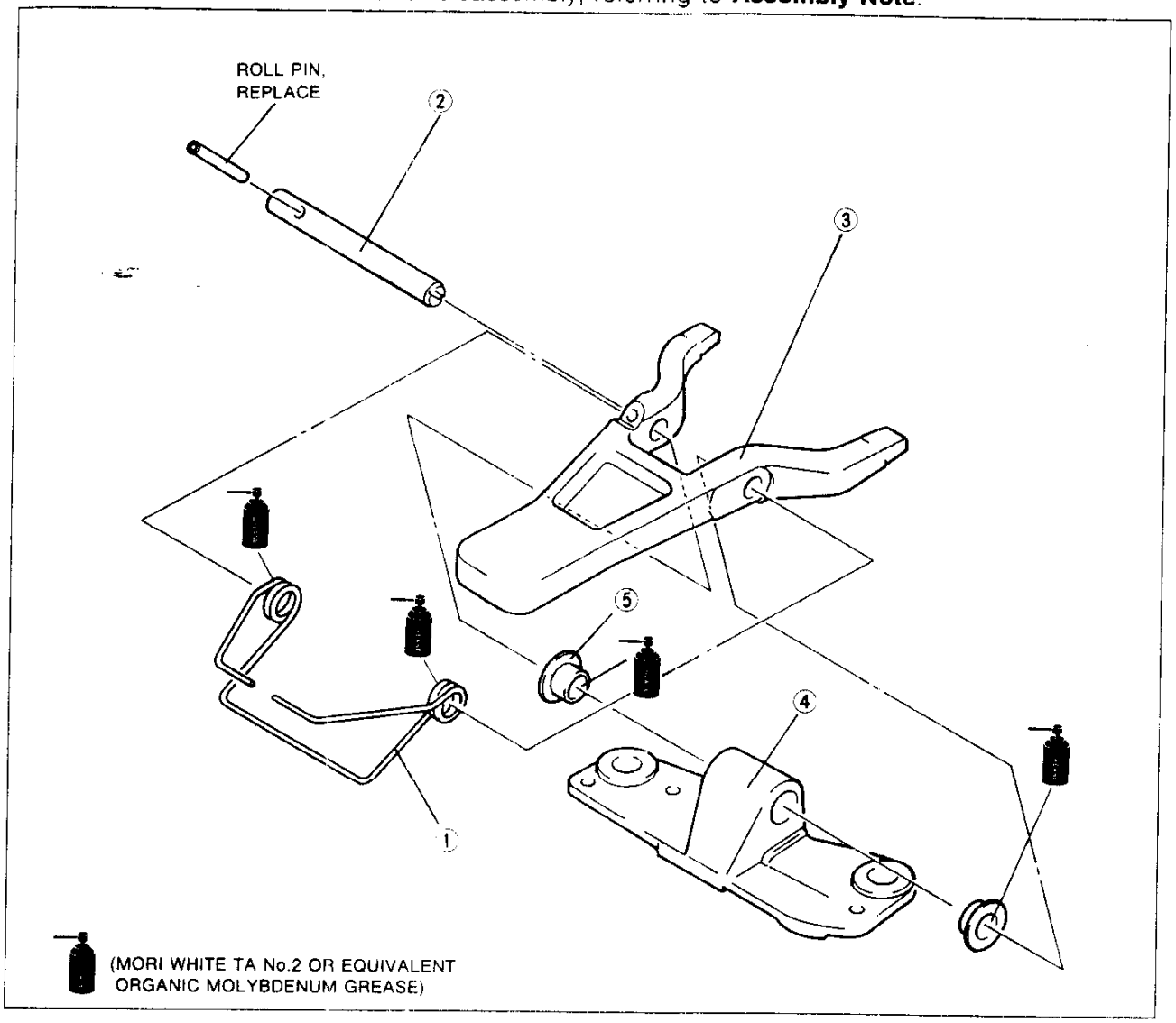

37U0HX 058

1. Return spring
   Inspect for damage and bending
2. Fork shaft
   Assembly Note ..... below
3. Clutch release fork
   Inspect for wear and damage
4. Release fork support
5. Bushing
   Inspect bushing bore for wear and damage

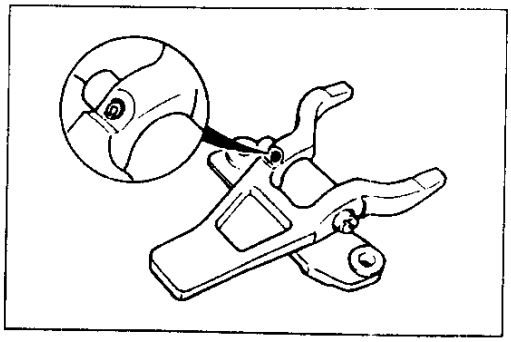

37U0HX-059

Assembly Note
Fork shaft

1. Install the roll pin with the split facing as shown.
2. Make sure the roll pin is installed flush with the release fork surface.

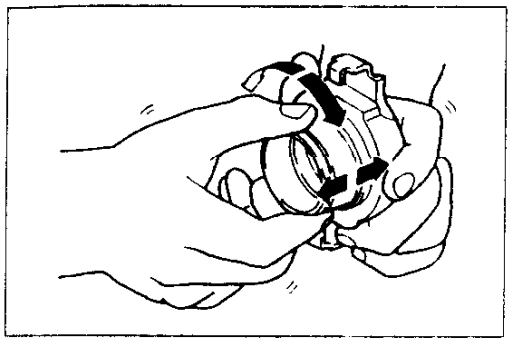

37J0HX-060

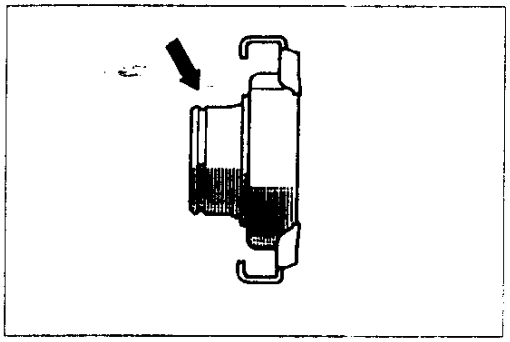

37U0HX-061

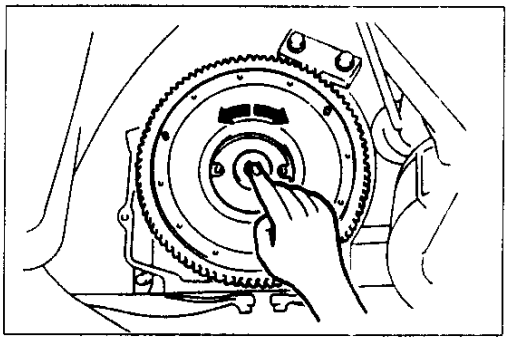

37U0HX-062

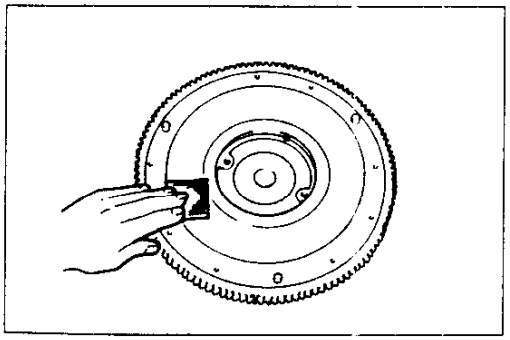

37U0HX-063

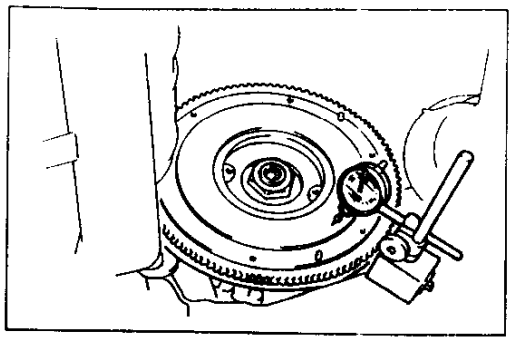

37U0HX-064

CLUTCH RELEASE COLLAR

INSPECTION

Caution

- **Inspect for wear and damage, and replace if necessary.**
- **The clutch release collar is a sealed bearing and must not be washed in solvent or by steam cleaning.**

1. Turn the collar while applying force in the axial direction. If the collar sticks or has excessive resistance, replace it.
2. Inspect for wear and damage to the release collar groove.

PILOT BEARING

INSPECTION

Caution

- **Inspect for wear and damage, and replace if necessary.**

Note

- **Inspect the pilot bearing while it is installed in the flywheel.**

Inspect the pilot bearing for wear or damage and check rotating condition.

FLYWHEEL

INSPECTION

Caution

- **Inspect for wear and damage, and replace if necessary.**

Note

- **Remove minor scoring or burning with emery paper.**

1. Inspect for scoring, cracks, and burning of the flywheel/clutch disc contact surface.
2. Inspect the ring gear teeth for wear and damage.
3. Measure the flywheel runout with a dial indicator. Replace the flywheel if runout is excessive.

Runout: 0.2 mm {0.008 in} max.